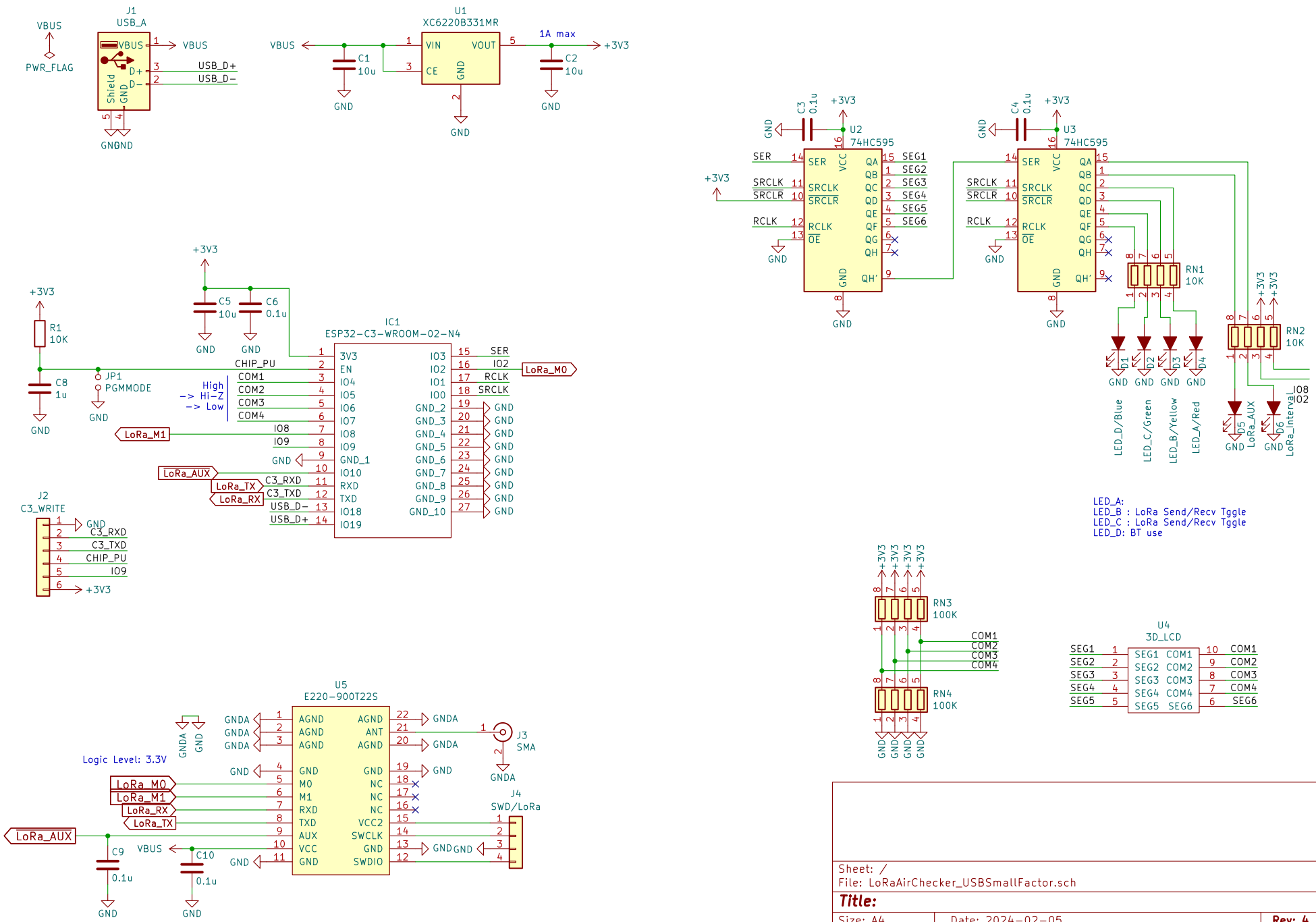

Sheet: /
File: LoRaAirChecker_USBSmallFactor.sch

Title:

Size: A4	Date: 2024-02-05	Rev: 4
	CLEALINK TECHNOLOGY CO., LTD. , JAPAN	Id: 1/1